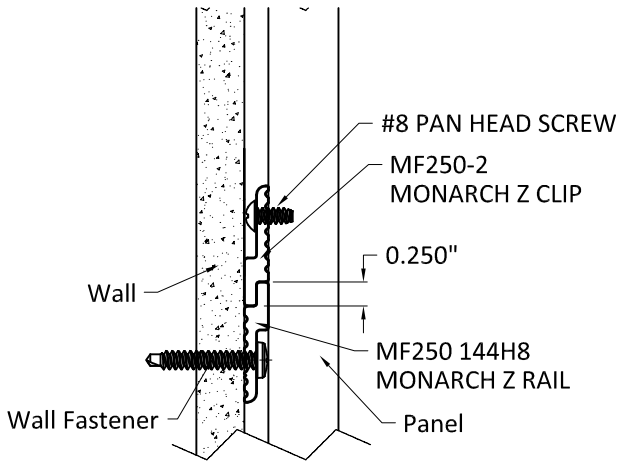

SCALE 1:2

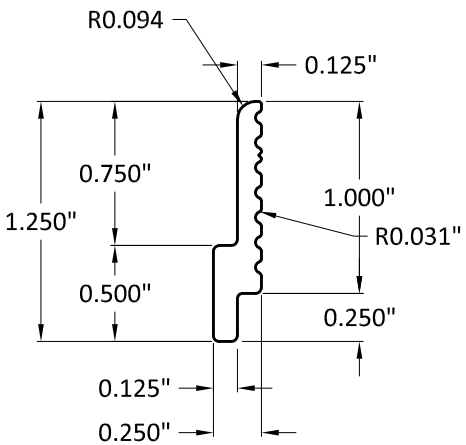

SCALE 1:1

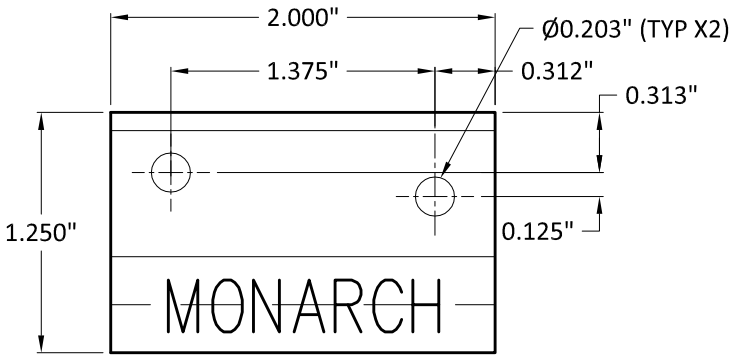

SCALE 1:1

PROPRIETARY AND CONFIDENTIAL

THE INFORMATION CONTAINED IN THIS DRAWING IS THE SOLE PROPERTY OF MONARCH METAL FABRICATION. ANY REPRODUCTION IN PART OR AS A WHOLE WITHOUT THE WRITTEN PERMISSION OF MONARCH METAL FABRICATION IS PROHIBITED.

MATERIAL: Aluminum

FINISH:

DO NOT SCALE DRAWING

	NAME	DATE
DRAWN	GURU	01/07/19
CHECKED	CHRIS	

MONARCH METAL FABRICATION

TITLE: MF250 Z CLIP WITH ¼" LIFT OFF

SIZE	DWG. NO.	REV
A4	MF250 .250 LIFT OFF Z CLIP	A

SCALE: 1:1, 1:2 | WEIGHT: ≈ 0.034 lbs | SHEET 1 OF 2

5 4 3 2 1

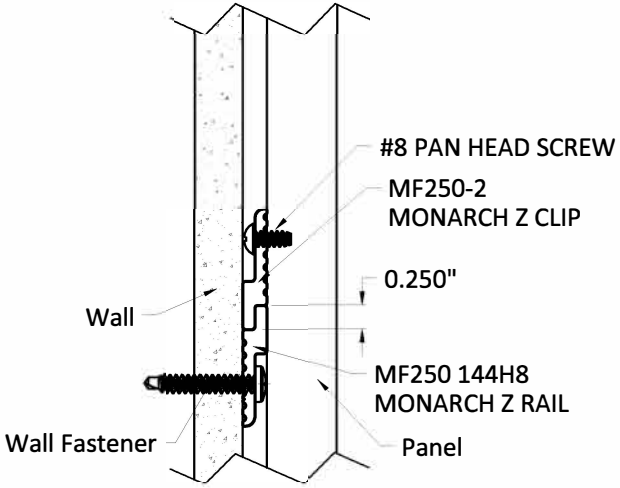

SCALE 1:2

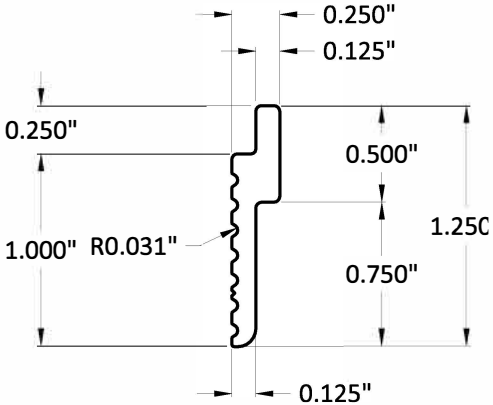

SCALE 1:1

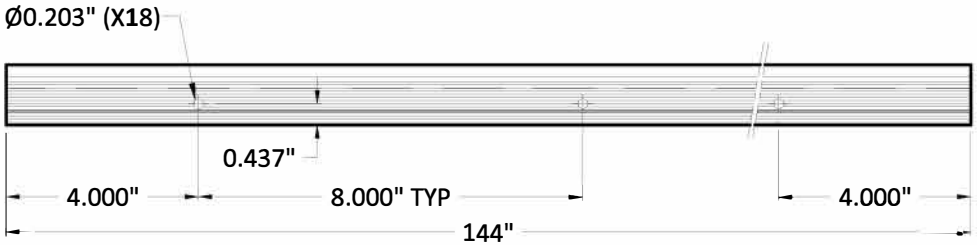

SCALE 1:4

PROPRIETARY AND CONFIDENTIAL

THE INFORMATION CONTAINED IN THIS DRAWING IS THE SOLE PROPERTY OF MONARCH METAL FABRICATION. ANY REPRODUCTION IN PART OR AS A WHOLE WITHOUT THE WRITTEN PERMISSION OF MONARCH METAL FABRICATION IS PROHIBITED.

MATERIAL: Aluminum

FINISH:

DO NOT SCALE DRAWING

	NAME	DATE
DRAWN	GURU	01/07/19
CHECKED	CHRIS	

MONARCH METAL FABRICATION

TITLE: MF250-144H8

SIZE	DWG. NO.	REV
A4	MF250 .250 LIFT OFF Z CLIP	-

SCALE: 1:1, 1:2, 1:4 | WEIGHT: ≈ 0.205 lbs/ft | SHEET 2 OF 2