RICE ENGINEERING
105 School Creek Trail | Luxemburg, WI 54217
(P) 920.617.1042 | (F) 920.617.1100

Monarch Metal Product Development

Double Bracket Matrix

Project Location:

Prepared for:
Monarch Metal Fabrication - Ronkonkoma, NY

REI Project # R18-12-120

10/14/2020

Design Criteria:

1. Analysis is based on the Aluminum Design Manual (ADM), 2015 Edition.
2. Aluminum alloy of brackets to be 6061-T6.
3. The substrate must be verified independently that the above imposed loads can be applied.
4. The capacity of the fasteners will control the allowable capacity of the brackets.
5. The Load Table is not to be used for project specific calculations without further review of a Licensed Professional Engineer.
6. Steel Studs/Furring shall be **Fy=50 ksi; 16 GA, or better.**
7. If screws are exposed, screws shall be **stainless steel alloy groups 1, 2, or 3 (300 series only), condition CW (Fy = 65 ksi, Fu = 100 ksi minimum),** as shown in calculations.
8. Screws and bolts shall be **Grade 5 (Fy = 85 ksi, Fu = 120 ksi minimum)**, unless otherwise noted in the calculations, with diameters and locations as shown in calculations**.** Carbon Steel Bolts and Hex Cap Screws greater than ¼" and less than 1" shall conform to SAE J429. Coating to be hot dip galvanized or have a manufacturer proprietary coating conforming to 1,000-hour salt spray corrosion resistance.
9. Grout-Filled CMU anchors shall be a threading cutting type anchor with the size, embed depth and spacing as per the calculations. Anchors shall be installed per the manufacturer's specifications. Use **DeWALT Wedge-Bolt+.** See manufacturer's ICC evaluation report for special inspection requirements.
10. Hollow Block CMU anchors shall be a threading cutting type anchor with the size, embed depth and spacing as per the calculations. Anchors shall be installed per the manufacturer's specifications. Use **DeWALT Ultracon+ with stalgard coating.** See manufacturer's ICC evaluation report for special inspection requirements.
11. Concrete masonry is assumed to be **ASTM C90, Type II, f'm = 2,000 psi minimum.**
12. Design of material separation to prevent reaction between dissimilar materials **not designed by Rice Engineering Inc.**
13. Use **Full Bearing Shims**.

Disclaimer:

This Certification is limited to the structural design of structural components of this Metal Panel system.
It does NOT include responsibility for:

- Structural design of hardware, flashing, gaskets, and sealants.
- Design of material separation to prevent reaction between dissimilar materials.
- Design of air and water infiltration prevention.
- Design of fire resistance, NFPA compliance
- The manufacture, assembly, or installation of the system.
- Quantities of materials or dimensional accuracy of drawings.

Not For Construction

RICE ENGINEERING
105 School Creek Trail | Luxemburg, WI 54217
(P) 920.617.1042 | (F) 920.617.1100

Monarch Metal Product Development

Double Bracket Matrix

Project Location:

Prepared for:
Monarch Metal Fabrication - Ronkonkoma, NY

REI Project # R18-12-120

10/14/2020

Page:	Description:	Date:	Revision:
T1	Double Bracket Matrix	9/3/20	
S1	Vertical Double Wall Bracket – 2" Dimensions	5/25/20	
S2	Vertical Double Wall Bracket – 3" Dimensions	5/25/20	
S3	Vertical Double Wall Bracket – 4" Dimensions	5/25/20	
S4	Vertical Double Wall Bracket – 5" Dimensions	5/25/20	
A1-A1C	Dead Load Anchor Bracket Design (2in)	9/3/20	
A2-A2C	Dead Load Anchor Bracket Design (3in)	9/3/20	
A3-A3C	Dead Load Anchor Bracket Design (4in)	9/3/20	
A4-A4C	Dead Load Anchor Bracket Design (5in)	9/3/20	
F1-F4	Fastener Design	5/25/20	

Disclaimer:

This Certification is limited to the structural design of structural components of this Metal Panel system.
It does NOT include responsibility for:

- Structural design of hardware, flashing, gaskets, and sealants.
- Design of material separation to prevent reaction between dissimilar materials.
- Design of air and water infiltration prevention.
- Design of fire resistance, NFPA compliance
- The manufacture, assembly, or installation of the system.
- Quantities of materials or dimensional accuracy of drawings.

Not For Construction

Vertical Double Wall Bracket

Maximum Lateral (Wind Load) Reaction (lbf)

Bracket Depth (IN)	Vertical Wall Reaction (lbf) per Bracket Strength										
	50	75	100	125	150	175	200	225	250	275	300
2	757	748	739	730	721	712	703	694	685	676	667
3	747	733	718	704	689	675	661	646	632	618	603
4	735	715	695	675	655	635	615	595	575	555	534
5	724	698	672	646	621	595	569	543	517	491	466
Bracket Depth (IN)	**Vertical Wall Reaction (lbf) per (4) #12 Fasteners into 16 Ga. Steel Studs**										
	50	75	100	125	150	175	200	225	250	275	300
2	440	430	420	410	401	391	381	371	362	352	342
3	428	413	397	382	367	351	336	321	305	290	274
4	416	394	373	351	330	308	287	265	244	222	201
5	404	376	348	321	293	265	237	210	182	154	127
Bracket Depth (IN)	**Vertical Wall Reaction (lbf) per (3) Anchors into Hollow Block CMU**										
	50	75	100	125	150	175	200	225	250	275	300
2	205	185	165	146	126	106	86	66	46	26	-
3	197	173	148	124	100	76	52	28	-	-	-
4	187	159	130	101	73	44	-	-	-	-	-
5	178	145	112	78	45	-	-	-	-	-	-
Bracket Depth (IN)	**Vertical Wall Reaction (lbf) per (2) Anchors into Grout Filled CMU**										
	50	75	100	125	150	175	200	225	250	275	300
2	428	407	386	365	344	323	303	282	261	240	219
3	416	390	363	337	310	284	257	231	204	178	151
4	404	371	339	306	273	241	208	175	143	110	77
5	392	353	314	275	236	198	159	120	81	42	-

1. Analysis is based on the Aluminum Design Manual (ADM), 2015 Edition.
2. Aluminum alloy of brackets to be 6061-T6.
3. The substrate must be verified independently that the above imposed loads can be applied.
4. The capacity of the fasteners will control the allowable capacity of the brackets.
5. The Load Table above is based on Allowable Stress Design (ASD).
6. The Load Table is not to be used for project specific calculations without further review of a Licensed Professional Engineer.
7. It is the responsibility of the installer to isolate dissimilar materials.
8. "-" denotes allowable lateral load reaction is less than 20 lbf.
9. Assumes 5/8" maximum sheathing thickness and sheathing can support the bearing load of the fasteners.
10. Steel substrate assumed to be 16 gauge steel studs, with Fy=50 ksi minimum
11. (4) EJOT JT3-DP3 #12 x 1-3/8" - HWH no washer fasteners, assumed 1/4" max shim thickness.
12. CMU substrates assumed to have a minimum prism strength of 2,000 psi.
13. Hollow block cmu anchors to be (3) 3/16" Dia. DeWALT Ultracon+ Anchors installed in 1/4" dia. holes 4" minimum edge/end distance and 1-1/4" embedment, Use Stalgard coating for exposed conditions. Acceptance of (2) anchors installed into same cell to be determined by independent analysis.
14. Grout-filled block cmu anchors to be (2) 3/8" dia. DeWALT Wedge Bolt+ installed into 7/16" dia. holes 3-3/4" minimum edge/end distance and 3" embedment
15. 4.8mm EJOT JT4-ZT-4 fasteners (304 stainless steel) used to attached the profile to anchor clips. (4) fasteners installed into round holes per double bracket.
16. See following Sheets S1-S4 for bracket details and anchor locations.

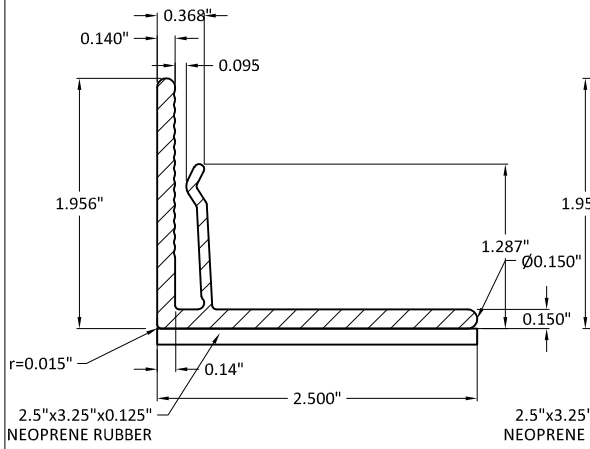

SIDE VIEW

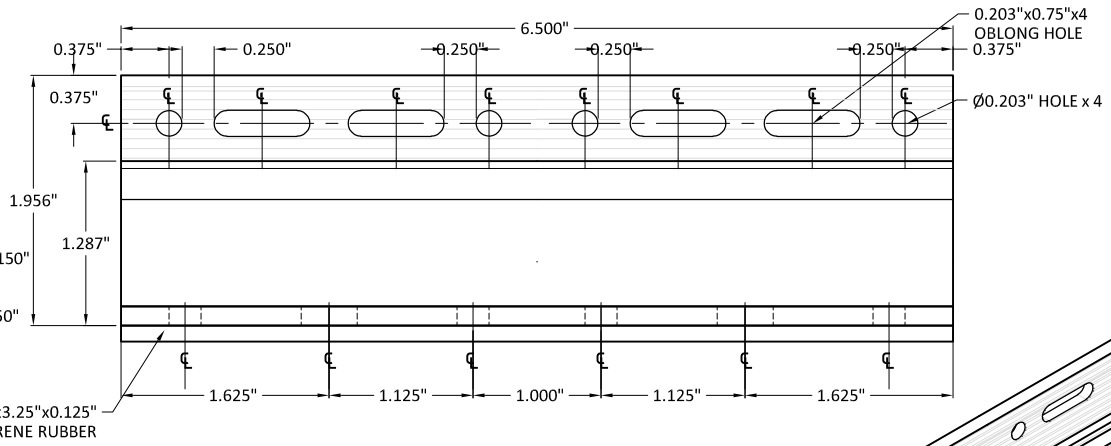

FRONT VIEW

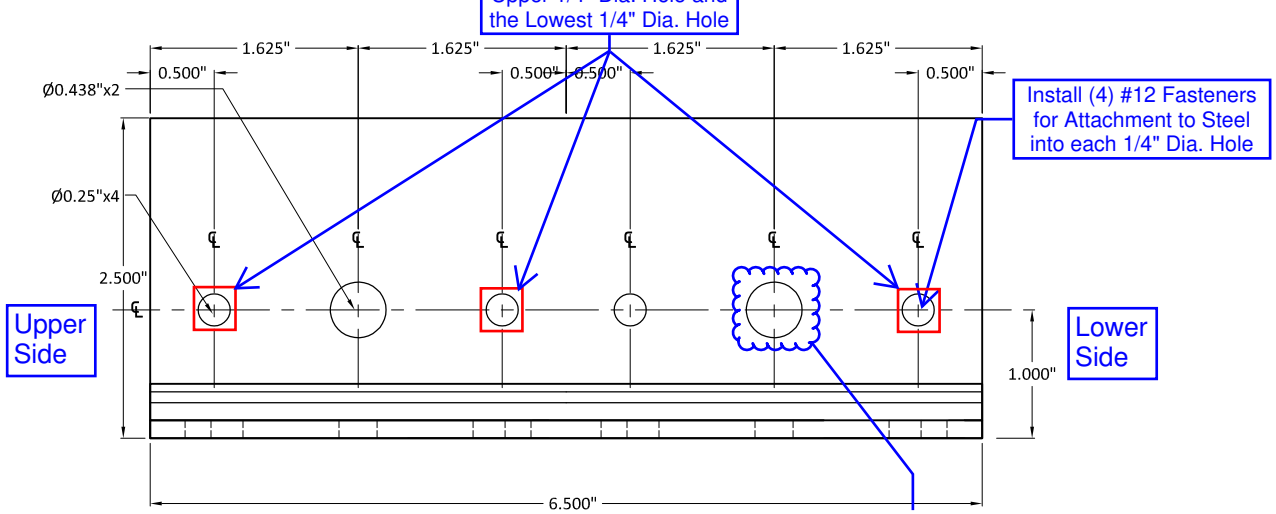

TOP VIEW

For Additional Fastener Location Information See Calculations

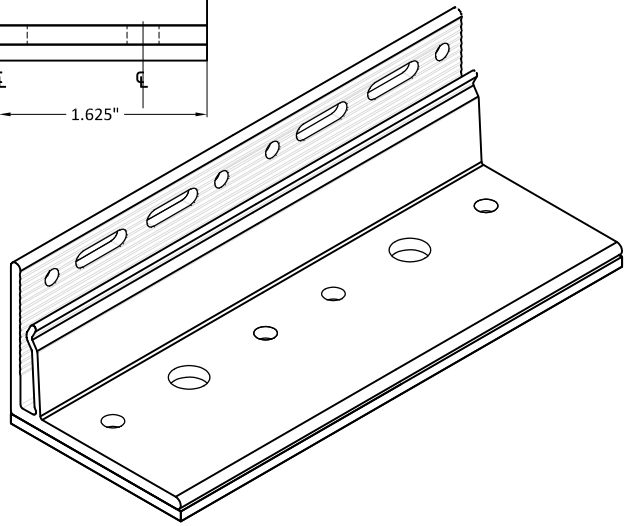

ISOMETRIC VIEW SCALE: 1:2

S1

MONARCH METAL FABRICATION

	NAME	DATE
DRAWN	ETC	09/04/19
CHECKED	CS	
COMMENTS:		

TITLE: Vertical Double Wall Bracket - 2"

SIZE	DWG. NO.	REV
A4	VWB-02-2X	A

SCALE: 1:1.5 | WEIGHT: - lbs/sqft | SHEET 1 OF 1

PROPRIETARY AND CONFIDENTIAL

THE INFORMATION CONTAINED IN THIS DRAWING IS THE SOLE PROPERTY OF MONARCH METAL FABRICATION. ANY REPRODUCTION IN PART OR AS A WHOLE WITHOUT THE WRITTEN PERMISSION OF MONARCH METAL FABRICATION IS PROHIBITED.

MATERIAL 6061-T6 Aluminum

FINISH Tumbled

DO NOT SCALE DRAWING

5 4 3 2 1

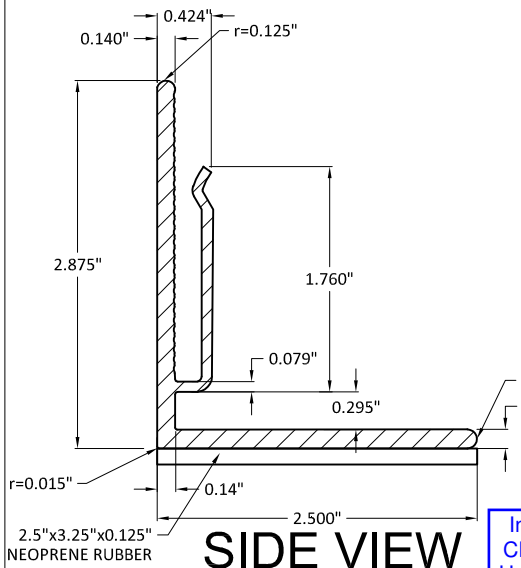

SIDE VIEW

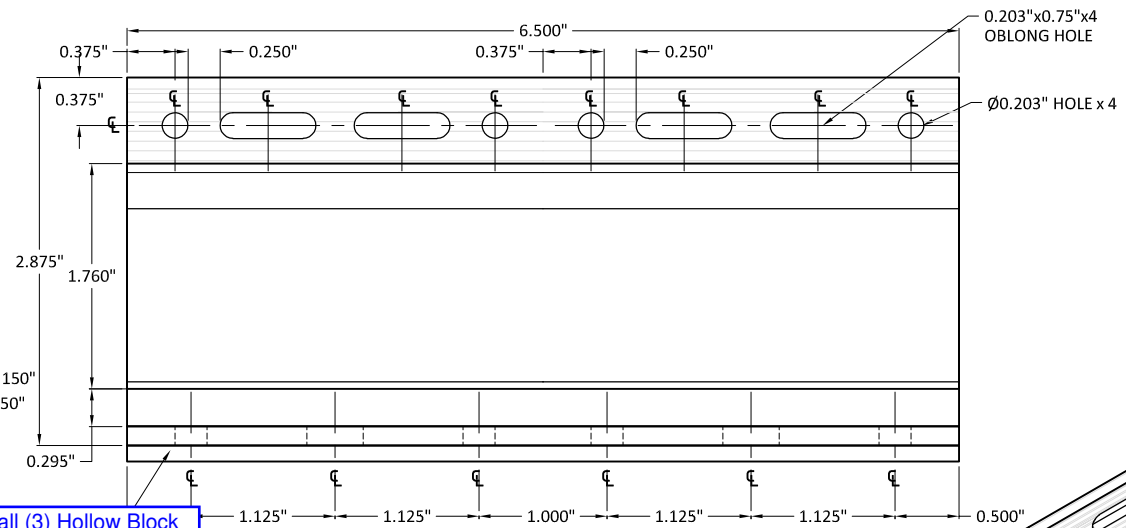

FRONT VIEW

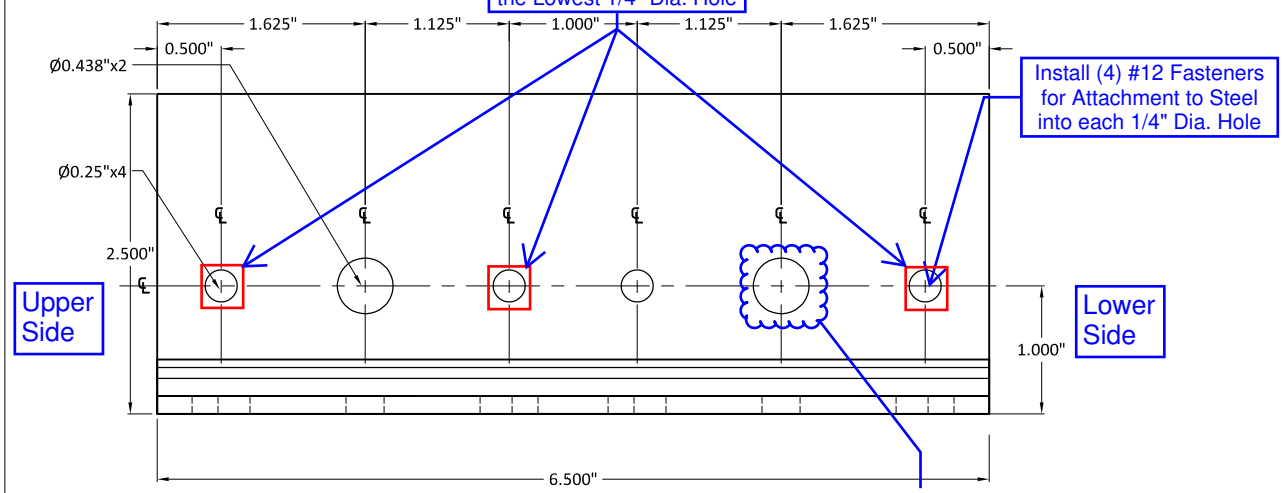

TOP VIEW

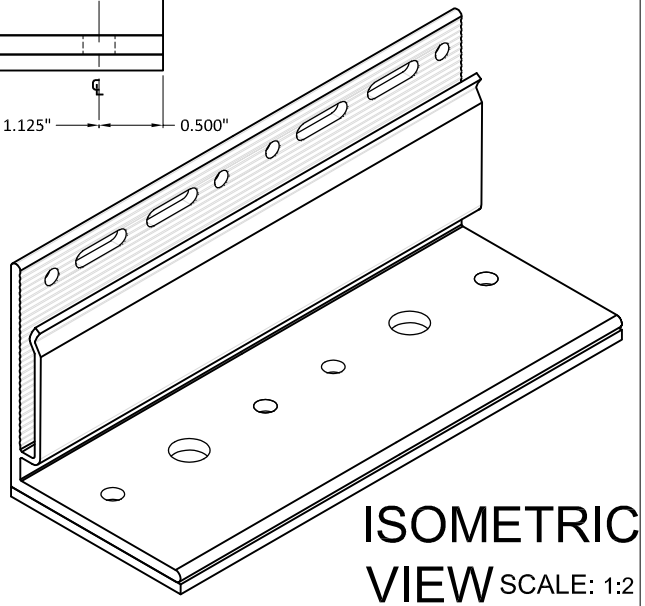

ISOMETRIC VIEW SCALE: 1:2

S2

For Additional Fastener Location Information See Calculations

PROPRIETARY AND CONFIDENTIAL

THE INFORMATION CONTAINED IN THIS DRAWING IS THE SOLE PROPERTY OF MONARCH METAL FABRICATION. ANY REPRODUCTION IN PART OR AS A WHOLE WITHOUT THE WRITTEN PERMISSION OF MONARCH METAL FABRICATION IS PROHIBITED.

MATERIAL: 6061-T6 Aluminum

FINISH: Tumbled

DO NOT SCALE DRAWING

	NAME	DATE
DRAWN	ETC	08/26/19
CHECKED	CS	

COMMENTS:

MONARCH METAL FABRICATION

TITLE: Vertical Double Wall Bracket - 3"

SIZE	DWG. NO.	REV
A4	VWB-03-2X	A

SCALE: 1:1.5 | WEIGHT: - lbs/sqft | SHEET 1 OF 1

5 4 3 2 1

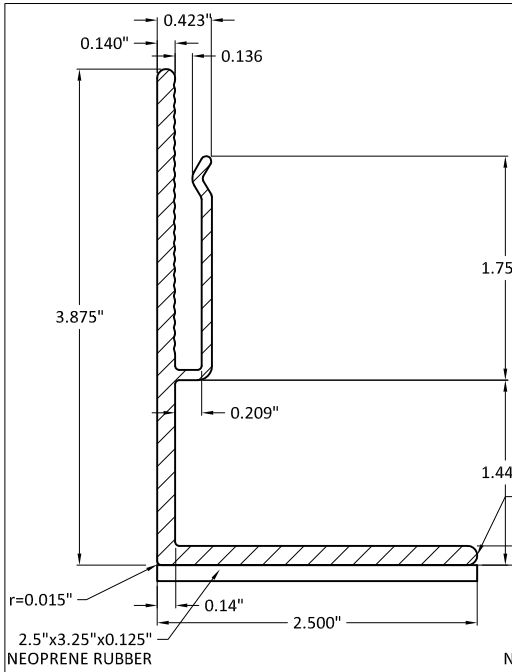

SIDE VIEW

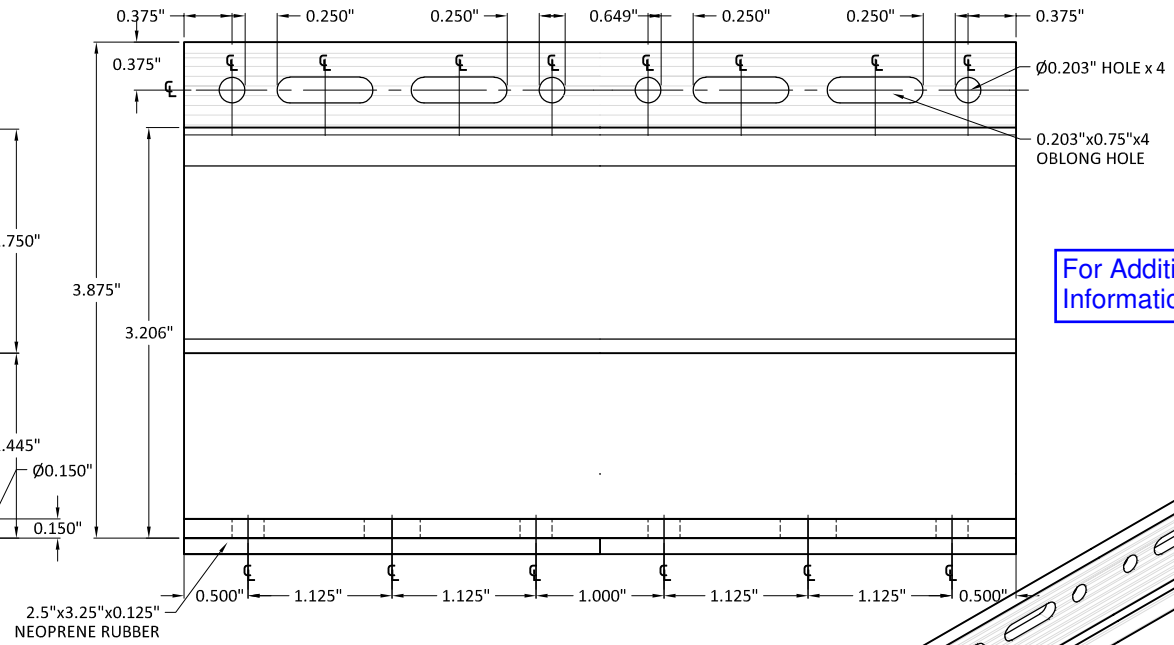

FRONT VIEW

For Additional Fastener Location Information See Calculations

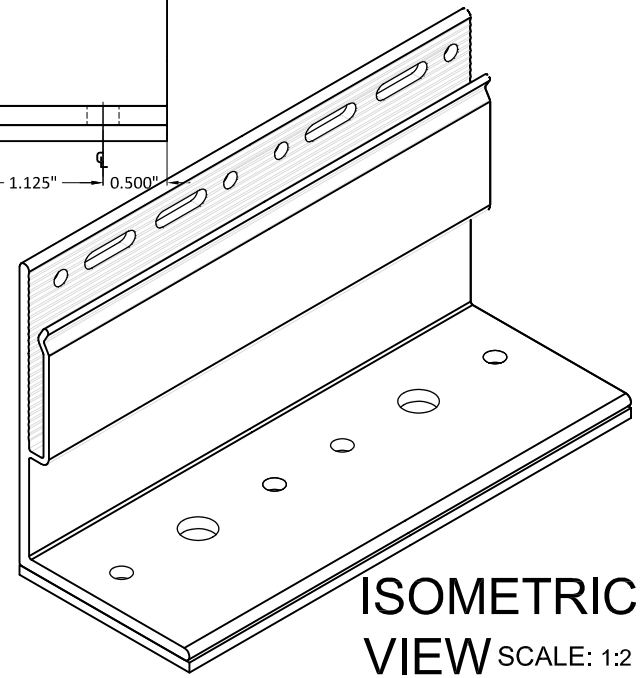

ISOMETRIC VIEW SCALE: 1:2

Install (3) Hollow Block CMU Anchors into Each Upper 1/4" Dia. Hole and the Lowest 1/4" Dia. Hole

Install (4) #12 Fasteners for Attachment to Steel into each 1/4" Dia. Hole

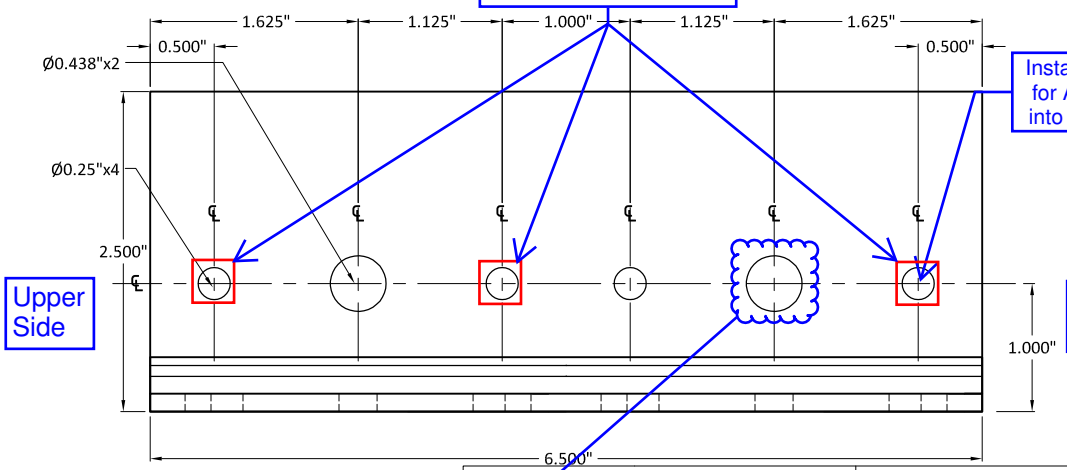

TOP VIEW

For 3/8" Dia. Anchors into Grout-Filled CMU Install into (2) 7/16" Dia. Holes

S3

MONARCH METAL FABRICATION

	NAME	DATE
DRAWN	ETC	09/04/19
CHECKED	CS	

COMMENTS:

TITLE: Vertical Double Wall Bracket - 4"

SIZE	DWG. NO.	REV
A4	VWB-04-2X	A

SCALE: 1:1.5 | WEIGHT: - lbs/sqft | SHEET 1 OF 1

PROPRIETARY AND CONFIDENTIAL

THE INFORMATION CONTAINED IN THIS DRAWING IS THE SOLE PROPERTY OF MONARCH METAL FABRICATION. ANY REPRODUCTION IN PART OR AS A WHOLE WITHOUT THE WRITTEN PERMISSION OF MONARCH METAL FABRICATION IS PROHIBITED.

MATERIAL 6061-T6 Aluminum

FINISH Tumbled

DO NOT SCALE DRAWING

5 4 3 2 1

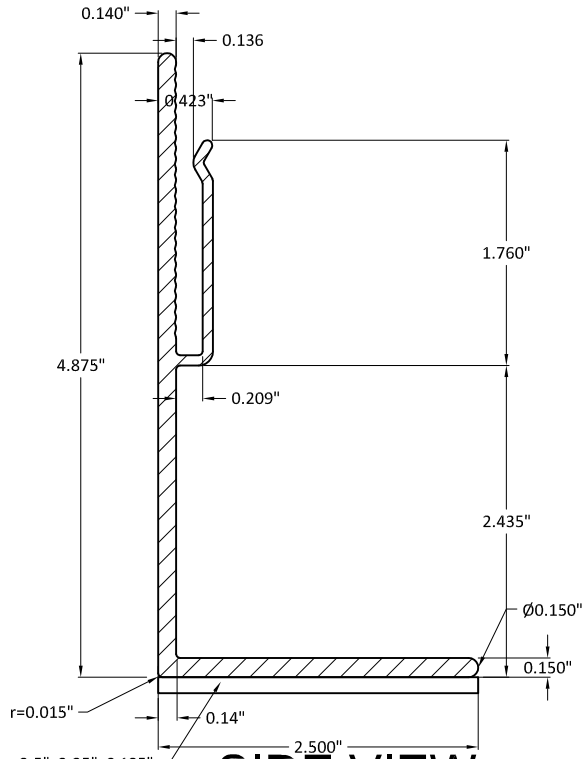

SIDE VIEW

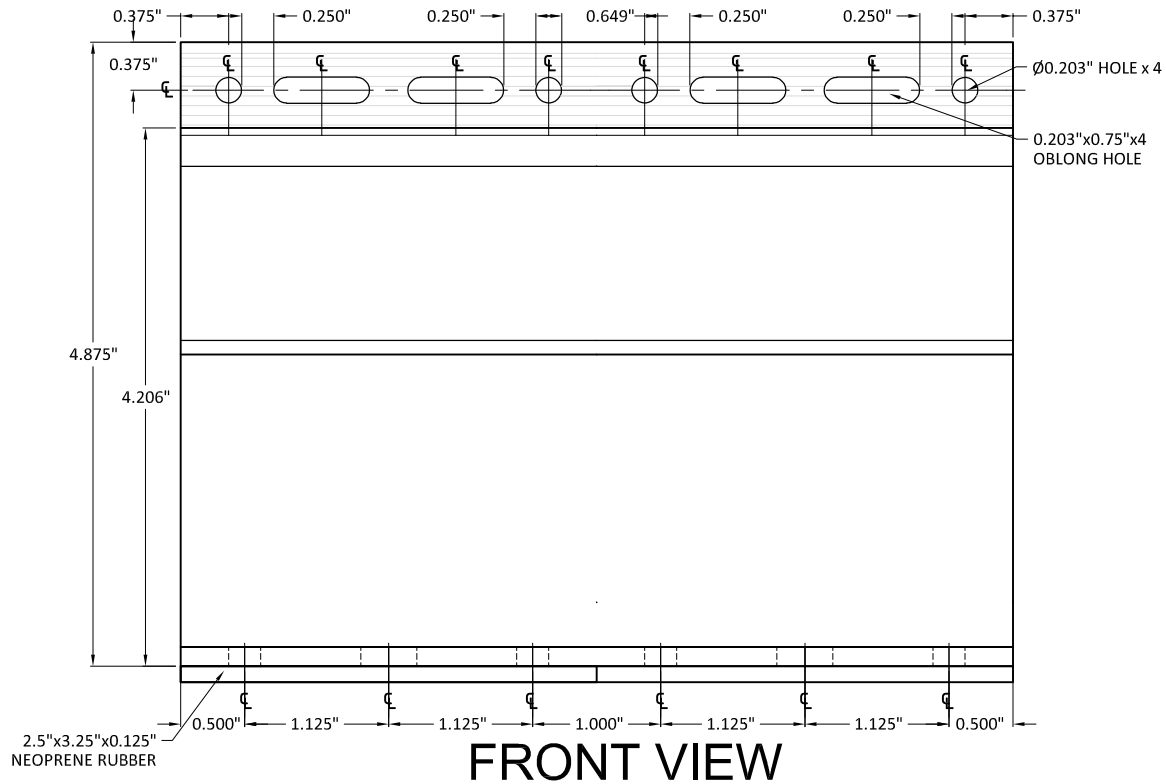

FRONT VIEW

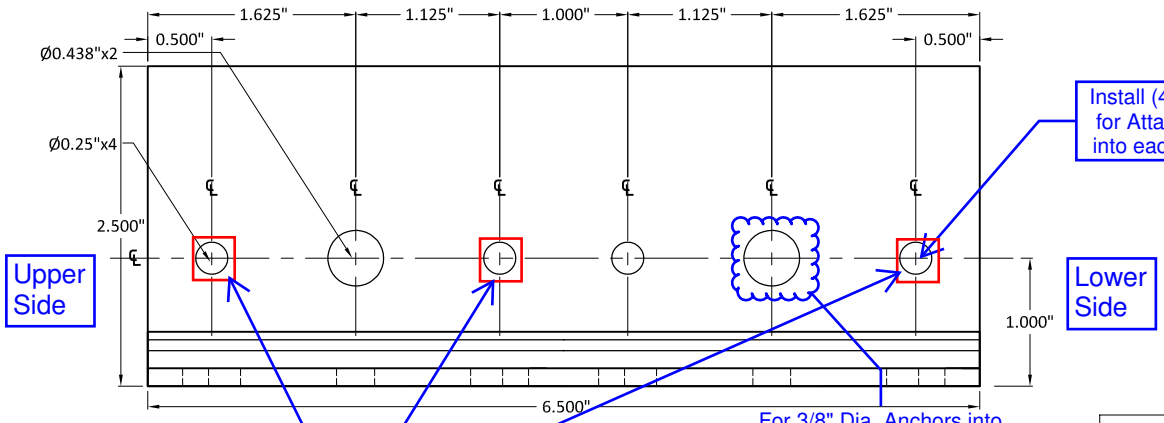

TOP VIEW

S4

MONARCH METAL FABRICATION

	NAME	DATE
DRAWN	ETC	09/04/19
CHECKED	CS	
COMMENTS:		

TITLE: Vertical Double Wall Bracket - 5"

SIZE	DWG. NO.	REV
A4	VWB-05-2X	A

SCALE: 1:1.5 | WEIGHT: - lbs/sqft | SHEET 1 OF 1

PROPRIETARY AND CONFIDENTIAL

THE INFORMATION CONTAINED IN THIS DRAWING IS THE SOLE PROPERTY OF MONARCH METAL FABRICATION. ANY REPRODUCTION IN PART OR AS A WHOLE WITHOUT THE WRITTEN PERMISSION OF MONARCH METAL FABRICATION IS PROHIBITED.

MATERIAL 6061-T6 Aluminum

FINISH Tumbled

DO NOT SCALE DRAWING

5 4 3 2 1

Dead Load Anchor Bracket Design (2in Bracket)	Detail Ref.	Sheet No: A1

Wind Load:

$R_{WL} := 391\,lbf$

Dead Load:

$d_1 := 1.58\,in$ Moment Arm for Bracket Deadload, From 2in Bracket

$R_{DL} := 175\,lbf$

(LB2) Check Local Bending (Weak)

$t_{LB2} := 0.15\,in$ thickness

$l_{LB2} := 6.5\,in$ width

$x_2 := 1.0\,in$ prying arm

$F_{y2} := 35000\,psi$ yield strength

$$R_{WL2} := \frac{\frac{t_{LB2}^2 \cdot l_{LB2}}{6} \cdot \frac{1.5 \cdot F_{y2}}{1.65}}{x_2} - \frac{R_{DL} \cdot (d_1)}{l_{LB2} \cdot (0.67)} = 712.08\,lbf$$

$$M_{LB2} := R_{WL} \cdot x_2 + \frac{R_{DL} \cdot (d_1)}{l_{LB2} \cdot (0.67)} \cdot x_2 = 454\,in \cdot lbf$$

$$F_{bLB2} := \frac{1.5 \cdot F_{y2}}{1.65} = 31818\,psi$$ 6061-T6 Alum

$$f_{bLB2} := \frac{M_{LB2} \cdot 6}{t_{LB2}^2 \cdot l_{LB2}} = 18646 \cdot psi$$

$$\left(\frac{f_{bLB2}}{F_{bLB2}}\right) = \text{"0.59 < 1.00 OK"}$$

Use Extruded 4" Bracket Clip Back Flange Min. 0.150" Thick, 6-1/2" Long, (6061-T6 Alum)

(LB3) Check Local Bending (Strong)

$t_{LB3} := 0.15\,in$ thickness

$l_{LB3} := 6.5\,in$ width

$F_{y3} := 35000\,psi$ yield strength

$M_{LB3} := R_{DL} \cdot d_1 = 277\,in \cdot lbf$

$$F_{bLB3} := \frac{1.5 \cdot F_{y3}}{1.65} = 31818\,psi$$ 6061-T6 Alum

$$f_{bLB3} := \frac{M_{LB3} \cdot 6}{t_{LB3} \cdot l_{LB3}^2} = 262 \cdot psi$$

$$\left(\frac{f_{bLB3}}{F_{bLB3}}\right) = \text{"0.01 < 1.00 OK"}$$

Use Extruded 4" Bracket Clip Back Flange Min. 0.150" Thick, 6-1/2" Long, (6061-T6 Alum)

(F1) Check Bracket Fasteners

$n_{F1} := 4$ number of fasteners

$V_{alF1} := \min[275, 0.19\cdot(0.1)\cdot(30000)]\,lbf = 275\cdot lbf$ allowabl shear

$R_{WL1} := \sqrt{(V_{alF1}\cdot n_{F1})^2 + R_{DL}^2} = 1114\ lbf$

Use (4) S.S #10 (0.19" Dia.) Per Clip
300 Series, Cond. CW, Fy = 65 ksi

$V_{alF2} := 185\,lbf$ allow shear ea. fast

$T_{alF2} := 160\,lbf$ allow tension ea. fast.

(F2) Check Screws into Hollow Block CMU

$n_{F2} := 3$ number of fasteners

$$V_{F2} := \sqrt{\left(\frac{R_{DL}}{n_{F2}}\right)^2 + \left(\frac{R_{DL}\cdot 1.0\,in}{5.5\,in\cdot n_{F2}\cdot 0.5}\right)^2} = 62\,lbf$$ actual shear ea. fast.

$$T_{F2} := \frac{R_{DL}\cdot(d_1)}{(4.875\,in)\cdot(2)\cdot 0.85} + \frac{R_{WL}\cdot(2.5\,in)}{n_{F2}\cdot(1.5\,in)\cdot 0.85} = 289\,lbf$$ actual tension ea. fast.

$$R_{WL2a} := \left[\left[1.0 - \frac{\sqrt{\left(\frac{R_{DL}}{n_{F2}}\right)^2 + \left(\frac{R_{DL}\cdot 1.0\,in}{5.5\,in\cdot n_{F2}\cdot 0.333}\right)^2}}{V_{alF2}}\right]\cdot T_{alF2} - \frac{R_{DL}\cdot(d_1)}{(4.875\,in)\cdot(n_{F2}\cdot 0.667)\cdot 0.85}\right]\cdot\frac{n_{F2}\cdot 1.5\,in\cdot 0.85}{2.5\,in} = 106\,lbf$$

ASSUME: Hollow CMU

$$\left(\frac{V_{F2}}{V_{alF2}} + \frac{T_{F2}}{T_{alF2}}\right) = \text{"2.14 > 1.05 NOT OK"}$$

$$\left(\frac{T_{F2}}{T_{alF2}}\right) = \text{"1.81 > 1.05 NOT OK"}$$

$$\left(\frac{V_{F2}}{V_{alF2}}\right) = \text{"0.34 < 1.00 OK"}$$

Anchor option not suitable for 2" double bracket for this given lateral reaction with the 175 lbf vertical reaction

Use (3) 3/16" Diameter DeWALT Ultracon+ Per Clip,
1-1/4" Min. Embedment
2-1/2" Min. Edge Distance
2-1/4" Min. Spacing
1/4" Maximum Shim Thickness

Anchors installed into 1/4" dia. Holes. Install in two upper most holes and the lowest hole as shown.

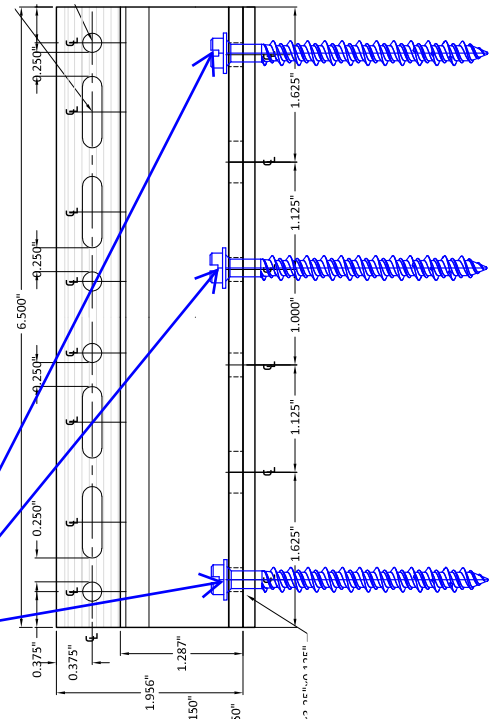

Top of Bracket

Anchor Installation Diagram

$V_{alF3} := 373\,lbf$ allow shear ea. fast

$T_{alF3} := 225\,lbf$ allow tension ea. fast.

(F3) Check Screws into Steel Studs

$n_{F3} := 4$ *number of fasteners*

$$V_{F3} := \sqrt{\left(\frac{R_{DL}}{n_{F3}}\right)^2 + \left(\frac{R_{DL}\cdot 1.0\,in}{3.25\,in\cdot n_{F3}\cdot 0.5}\right)^2} = 51\,lbf$$ *actual shear ea. fast.*

$$T_{F3} := \frac{R_{DL}\cdot(d_1)}{(4.875\,in)\cdot(0.5\cdot n_{F3})\cdot 0.85} + \frac{R_{WL}\cdot(2.5\,in)}{n_{F3}\cdot(1.5\,in)\cdot 0.85} = 225\,lbf$$ *actual tension ea. fast.*

$$R_{WL3a} := \left[\left[\frac{1.15}{2.55} - \frac{\sqrt{\left(\frac{R_{DL}}{n_{F3}}\right)^2 + \left(\frac{R_{DL}\cdot 1.0\,in}{3.25\,in\cdot n_{F3}\cdot 0.5}\right)^2}}{3V_{alF3}}\right]\cdot 3T_{alF3} - \frac{R_{DL}\cdot(d_1)}{(4.87\,in)\cdot(n_{F3}\cdot 0.5)\cdot 0.85}\right]\cdot\frac{n_{F3}\cdot 1.5\,in\cdot 0.85}{2.5\,in} = 490\,lbf$$

$$R_{WL3b} := \left[\left[T_{alF3} - \frac{R_{DL}\cdot d_1}{4.875\,in\cdot 0.85\cdot(n_{F3}\cdot 0.5)}\right]\cdot\frac{n_{F3}\cdot 1.5\,in\cdot 0.85}{2.5\,in}\right] = 391\,lbf$$

$$R_{WL3} := \min(R_{WL3a}, R_{WL3b}) = 391\,lbf$$

ASSUME: 16 gauge steel studs, Fy = 50 ksi

$$\left[\frac{\frac{V_{F3}}{3\cdot V_{alF3}} + \frac{T_{F3}}{3\cdot T_{alF3}}}{\left(\frac{1.15}{2.55}\right)}\right] = \text{"0.84 < 1.00 OK"}$$

$$\left(\frac{T_{F3}}{T_{alF3}}\right) = \text{"1 < 1.05 OK"}$$

$$\left(\frac{V_{F3}}{V_{alF3}}\right) = \text{"0.14 < 1.00 OK"}$$

USE (4) #12 EJOT JT3-DP3 Screws Per Clip
Grade 5 or Better, Fy = 92 ksi
2-3/4" O.C as Shown
1/4" Max Shim Thickness

Top of Bracket

Anchors installed into 1/4" dia. Holes.

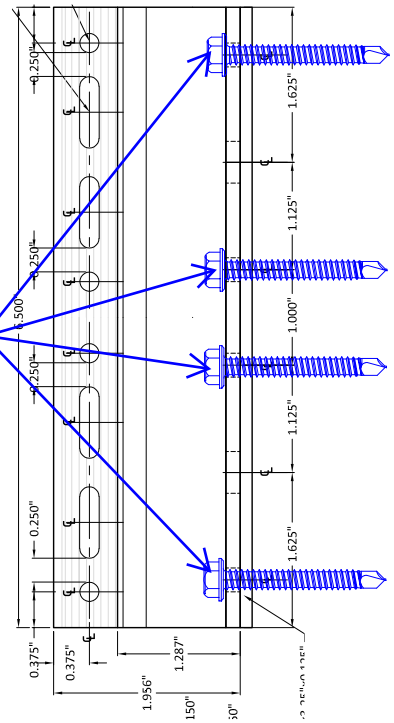

Anchor Installation Diagram

$V_{alF4} := 620\,lbf$ allow shear ea. fast

$T_{alF4} := 460\,lbf$ allow tension ea. fast.

(F4) Check Screws into Grout-Filled CMU

$n_{F4} := 2$ number of fasteners

$$V_{F4} := \sqrt{R_{DL}^2 + \left(\frac{R_{DL}\cdot 1.0\,in}{2.25\,in}\right)^2}\cdot\frac{1}{n_{F4}} = 96\,lbf$$ actual shear ea. fast.

$$T_{F4} := \frac{R_{DL}\cdot(d_1)}{(4.87\,in)\cdot(1)\cdot 0.85} + \frac{R_{WL}\cdot(2.5\,in)}{n_{F4}\cdot(1.5\,in)\cdot 0.85} = 450\,lbf$$ actual tension ea. fast.

$$R_{WL4} := \left[\left[1.0 - \frac{\sqrt{\left(\frac{R_{DL}}{n_{F4}}\right)^2 + \left(\frac{R_{DL}\cdot 1.0\,in}{3.25\,in\cdot n_{F4}\cdot 0.5}\right)^2}}{V_{alF4}}\right]\cdot T_{alF4} - \frac{R_{DL}\cdot(d_1)}{(4.87\,in)\cdot(n_{F4}\cdot 0.5)\cdot 0.85}\right]\cdot\frac{n_{F4}\cdot 1.5\,in\cdot 0.85}{2.5\,in} = 323\,lbf$$

ASSUME: Grout-Filled CMU, f'm=1,500 psi minimum

$$'\left(\frac{V_{F4}}{V_{alF4}} + \frac{T_{F4}}{T_{alF4}}\right) = \text{"1.13 > 1.05 NOT OK"}$$

$$'\left(\frac{T_{F4}}{T_{alF4}}\right) = \text{"0.98 < 1.00 OK"}$$

$$'\left(\frac{V_{F4}}{V_{alF4}}\right) = \text{"0.15 < 1.00 OK"}$$

Anchor option not suitable for 2" double bracket for this given lateral reaction with the 175 lbf vertical reaction

Use (2) 3/8" Diameter DeWALT Wedge Bolt+ Per Clip, into f'm=1,500 psi Grout -Filed CMU
3" Min. Embedment
3-3/4" Min. Edge Distance
3-1/4" Min. Spacing
3/8" Maximum Shim Thickness

Top of Bracket

Anchors installed into 7/16" dia. Holes.

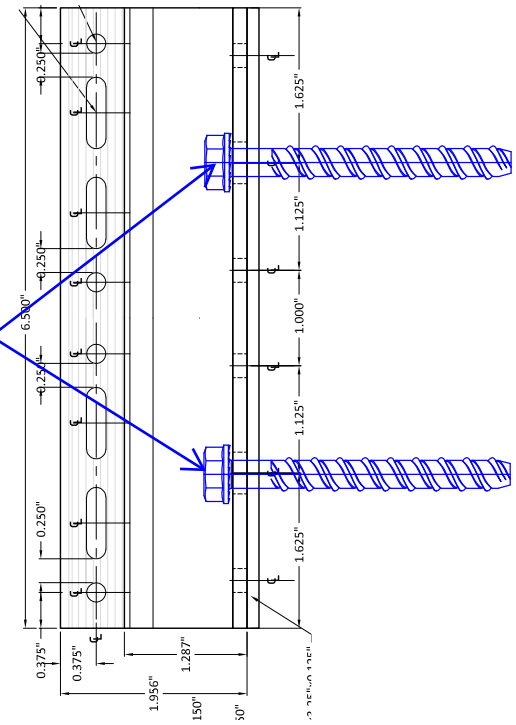

Anchor Installation Diagram

Dead Load Anchor Bracket Design (3in Bracket)	Detail Ref.	Sheet No: A2

Wind Load:

$R_{WL} := 148\,lbf$

Dead Load:

$d_1 := 2.5\,in$ Moment Arm for Bracket Deadload, From 3in Bracket

$R_{DL} := 100\,lbf$

(LB2) Check Local Bending (Weak)

$t_{LB2} := 0.15\,in$ thickness

$l_{LB2} := 6.5\,in$ width

$x_2 := 1.0\,in$ prying arm

$F_{y2} := 35000\,psi$ yield strength

$$R_{WL2} := \frac{\frac{t_{LB2}^2 \cdot l_{LB2}}{6} \cdot \frac{1.5 \cdot F_{y2}}{1.65}}{x_2} - \frac{R_{DL} \cdot (d_1)}{l_{LB2} \cdot (0.67)} = 718.16\,lbf$$

$$M_{LB2} := R_{WL} \cdot x_2 + \frac{R_{DL} \cdot (d_1)}{l_{LB2} \cdot (0.67)} \cdot x_2 = 205\,in \cdot lbf$$

$$F_{bLB2} := \frac{1.5 \cdot F_{y2}}{1.65} = 31818\,psi \quad \text{6061-T6 Alum}$$

$$f_{bLB2} := \frac{M_{LB2} \cdot 6}{t_{LB2}^2 \cdot l_{LB2}} = 8427 \cdot psi$$

$$\left(\frac{f_{bLB2}}{F_{bLB2}}\right) = \text{"0.26 < 1.00 OK"}$$

Use Extruded 4" Bracket Clip Back Flange Min. 0.150" Thick, 6-1/2" Long, (6061-T6 Alum)

(LB3) Check Local Bending (Strong)

$t_{LB3} := 0.15\,in$ thickness

$l_{LB3} := 6.5\,in$ width

$F_{y3} := 35000\,psi$ yield strength

$M_{LB3} := R_{DL} \cdot d_1 = 250\,in \cdot lbf$

$$F_{bLB3} := \frac{1.5 \cdot F_{y3}}{1.65} = 31818\,psi \quad \text{6061-T6 Alum}$$

$$f_{bLB3} := \frac{M_{LB3} \cdot 6}{t_{LB3} \cdot l_{LB3}^2} = 237 \cdot psi$$

$$\left(\frac{f_{bLB3}}{F_{bLB3}}\right) = \text{"0.01 < 1.00 OK"}$$

Use Extruded 4" Bracket Clip Back Flange Min. 0.150" Thick, 6-1/2" Long, (6061-T6 Alum)

(F1) Check Bracket Fasteners

$n_{F1} := 4$ number of fasteners

$V_{alF1} := \min[275, 0.19\cdot(0.1)\cdot(30000)]\,lbf = 275\cdot lbf$ allowabl shear

$R_{WL1} := \sqrt{(V_{alF1}\cdot n_{F1})^2 + R_{DL}^2} = 1105\,lbf$

Use (4) S.S #10 (0.19" Dia.) Per Clip
300 Series, Cond. CW, Fy = 65 ksi

$V_{alF2} := 185\,lbf$ allow shear ea. fast

$T_{alF2} := 160\,lbf$ allow tension ea. fast.

(F2) Check Screws into Hollow Block CMU

$n_{F2} := 3$ number of fasteners

$$V_{F2} := \sqrt{\left(\frac{R_{DL}}{n_{F2}}\right)^2 + \left(\frac{R_{DL}\cdot 1.0in}{5.5in\cdot n_{F2}\cdot 0.5}\right)^2} = 35\,lbf$$ actual shear ea. fast.

$$T_{F2} := \frac{R_{DL}\cdot(d_1)}{(4.875in)\cdot(2)\cdot 0.85} + \frac{R_{WL}\cdot(2.5in)}{n_{F2}\cdot(1.5in)\cdot 0.85} = 127\,lbf$$ actual tension ea. fast.

$$R_{WL2a} := \left[\left[1.0 - \frac{\sqrt{\left(\frac{R_{DL}}{n_{F2}}\right)^2 + \left(\frac{R_{DL}\cdot 1.0in}{5.5in\cdot n_{F2}\cdot 0.333}\right)^2}}{V_{alF2}}\right]\cdot T_{alF2} - \frac{R_{DL}\cdot(d_1)}{(4.875in)\cdot(n_{F2}\cdot 0.667)\cdot 0.85}\right]\cdot\frac{n_{F2}\cdot 1.5in\cdot 0.85}{2.5in} = 148\,lbf$$

ASSUME: Hollow CMU

$$\left(\frac{V_{F2}}{V_{alF2}} + \frac{T_{F2}}{T_{alF2}}\right) = \text{"0.98 < 1.00 OK"}$$

$$\left(\frac{T_{F2}}{T_{alF2}}\right) = \text{"0.79 < 1.00 OK"}$$

$$\left(\frac{V_{F2}}{V_{alF2}}\right) = \text{"0.19 < 1.00 OK"}$$

Use (3) 3/16" Diameter DeWALT Ultracon+ Per Clip,
1-1/4" Min. Embedment
2-1/2" Min. Edge Distance
2-1/4" Min. Spacing
1/4" Maximum Shim Thickness

$V_{alF3} := 373\,lbf$ allow shear ea. fast

$T_{alF3} := 225\,lbf$ allow tension ea. fast.

(F3) Check Screws into Steel Studs

$n_{F3} := 4$ *number of fasteners*

$$V_{F3} := \sqrt{\left(\frac{R_{DL}}{n_{F3}}\right)^2 + \left(\frac{R_{DL}\cdot 1.0in}{3.25in\cdot n_{F3}\cdot 0.5}\right)^2} = 29\,lbf$$ *actual shear ea. fast.*

$$T_{F3} := \frac{R_{DL}\cdot(d_1)}{(4.875in)\cdot(0.5\cdot n_{F3})\cdot 0.85} + \frac{R_{WL}\cdot(2.5in)}{n_{F3}\cdot(1.5in)\cdot 0.85} = 103\,lbf$$ *actual tension ea. fast.*

$$R_{WL3a} := \left[\left[\frac{1.15}{2.55} - \frac{\sqrt{\left(\frac{R_{DL}}{n_{F3}}\right)^2 + \left(\frac{R_{DL}\cdot 1.0in}{3.25in\cdot n_{F3}\cdot 0.5}\right)^2}}{3V_{alF3}}\right]\cdot 3T_{alF3} - \frac{R_{DL}\cdot(d_1)}{(4.87in)\cdot(n_{F3}\cdot 0.5)\cdot 0.85}\right]\cdot\frac{n_{F3}\cdot 1.5in\cdot 0.85}{2.5in} = 523\,lbf$$

$$R_{WL3b} := \left[\left[T_{alF3} - \frac{R_{DL}\cdot d_1}{4.875in\cdot 0.85\cdot(n_{F3}\cdot 0.5)}\right]\cdot\frac{n_{F3}\cdot 1.5in\cdot 0.85}{2.5in}\right] = 397\,lbf$$

$$R_{WL3} := \min(R_{WL3a}, R_{WL3b}) = 397\,lbf$$

ASSUME: 16 gauge steel studs, Fy = 50 ksi

$$\left[\frac{\frac{V_{F3}}{3\cdot V_{alF3}} + \frac{T_{F3}}{3\cdot T_{alF3}}}{\left(\frac{1.15}{2.55}\right)}\right] = \text{"0.4 < 1.00 OK"}$$

$$\left(\frac{T_{F3}}{T_{alF3}}\right) = \text{"0.46 < 1.00 OK"}$$

$$\left(\frac{V_{F3}}{V_{alF3}}\right) = \text{"0.08 < 1.00 OK"}$$

USE (4) #12 EJOT JT3-DP3 Screws Per Clip
Grade 5 or Better, Fy = 92 ksi
2-3/4" O.C as Shown
1/4" Max Shim Thickness

$V_{alF4} := 620\,lbf$ allow shear ea. fast

$T_{alF4} := 460\,lbf$ allow tension ea. fast.

(F4) Check Screws into Grout-Filled CMU

$n_{F4} := 2$ number of fasteners

$$V_{F4} := \sqrt{R_{DL}^{2} + \left(\frac{R_{DL}\cdot 1.0\,in}{2.25\,in}\right)^{2}}\cdot\frac{1}{n_{F4}} = 55\,lbf$$ actual shear ea. fast.

$$T_{F4} := \frac{R_{DL}\cdot(d_1)}{(4.87\,in)\cdot(1)\cdot 0.85} + \frac{R_{WL}\cdot(2.5\,in)}{n_{F4}\cdot(1.5\,in)\cdot 0.85} = 205\,lbf$$ actual tension ea. fast.

$$R_{WL4} := \left[\left[1.0 - \frac{\sqrt{\left(\frac{R_{DL}}{n_{F4}}\right)^{2} + \left(\frac{R_{DL}\cdot 1.0\,in}{3.25\,in\cdot n_{F4}\cdot 0.5}\right)^{2}}}{V_{alF4}}\right]\cdot T_{alF4} - \frac{R_{DL}\cdot(d_1)}{(4.87\,in)\cdot(n_{F4}\cdot 0.5)\cdot 0.85}\right]\cdot\frac{n_{F4}\cdot 1.5\,in\cdot 0.85}{2.5\,in} = 363\,lbf$$

ASSUME: Grout-Filled CMU, f'm=1,500 psi minimum

$$'\left(\frac{V_{F4}}{V_{alF4}} + \frac{T_{F4}}{T_{alF4}}\right) = \text{"0.53 < 1.00 OK"}$$

$$'\left(\frac{T_{F4}}{T_{alF4}}\right) = \text{"0.45 < 1.00 OK"}$$

$$'\left(\frac{V_{F4}}{V_{alF4}}\right) = \text{"0.09 < 1.00 OK"}$$

Use (2) 3/8" Diameter DeWALT Wedge Bolt+ Per Clip,
into f'm=1,500 psi Grout -Filed CMU
3" Min. Embedment
3-3/4" Min. Edge Distance
3-1/4" Min. Spacing
3/8" Maximum Shim Thickness

Dead Load Anchor Bracket Design (4in Bracket)	Detail Ref.	Sheet No: A3

Wind Load:

$R_{WL} := 287\,lbf$

Dead Load:

$d_1 := 3.5\,in$ Moment Arm for Bracket Deadload, From 4in Bracket

$R_{DL} := 200\,lbf$

(LB2) Check Local Bending (Weak)

$t_{LB2} := 0.15\,in$ thickness

$l_{LB2} := 6.5\,in$ width

$x_2 := 1.0\,in$ prying arm

$F_{y2} := 35000\,psi$ yield strength

$$R_{WL2} := \frac{\frac{t_{LB2}^2 \cdot l_{LB2}}{6} \cdot \frac{1.5 \cdot F_{y2}}{1.65}}{x_2} - \frac{R_{DL} \cdot (d_1)}{l_{LB2} \cdot (0.67)} = 614.83\,lbf$$

$$M_{LB2} := R_{WL} \cdot x_2 + \frac{R_{DL} \cdot (d_1)}{l_{LB2} \cdot (0.67)} \cdot x_2 = 448\,in \cdot lbf$$

$$F_{bLB2} := \frac{1.5 \cdot F_{y2}}{1.65} = 31818\,psi \quad \text{6061-T6 Alum}$$

$$f_{bLB2} := \frac{M_{LB2} \cdot 6}{t_{LB2}^2 \cdot l_{LB2}} = 18369 \cdot psi$$

$$\left(\frac{f_{bLB2}}{F_{bLB2}}\right) = \text{"0.58 < 1.00 OK"}$$

Use Extruded 4" Bracket Clip Back Flange Min. 0.150" Thick, 6-1/2" Long, (6061-T6 Alum)

(LB3) Check Local Bending (Strong)

$t_{LB3} := 0.15\,in$ thickness

$l_{LB3} := 6.5\,in$ width

$F_{y3} := 35000\,psi$ yield strength

$M_{LB3} := R_{DL} \cdot d_1 = 700\,in \cdot lbf$

$$F_{bLB3} := \frac{1.5 \cdot F_{y3}}{1.65} = 31818\,psi \quad \text{6061-T6 Alum}$$

$$f_{bLB3} := \frac{M_{LB3} \cdot 6}{t_{LB3} \cdot l_{LB3}^2} = 663 \cdot psi$$

$$\left(\frac{f_{bLB3}}{F_{bLB3}}\right) = \text{"0.02 < 1.00 OK"}$$

Use Extruded 4" Bracket Clip Back Flange Min. 0.150" Thick, 6-1/2" Long, (6061-T6 Alum)

(F1) Check Bracket Fasteners

$n_{F1} := 4$ number of fasteners

$V_{alF1} := \min[275, 0.19\cdot(0.1)\cdot(30000)]\,lbf = 275\cdot lbf$ allowabl shear

$R_{WL1} := \sqrt{(V_{alF1}\cdot n_{F1})^2 + R_{DL}^2} = 1118\ lbf$

Use (4) S.S #10 (0.19" Dia.) Per Clip
300 Series, Cond. CW, Fy = 65 ksi

$V_{alF2} := 185\,lbf$ allow shear ea. fast

$T_{alF2} := 160\,lbf$ allow tension ea. fast.

(F2) Check Screws into Hollow Block CMU

$n_{F2} := 3$ number of fasteners

$$V_{F2} := \sqrt{\left(\frac{R_{DL}}{n_{F2}}\right)^2 + \left(\frac{R_{DL}\cdot 1.0\,in}{5.5\,in\cdot n_{F2}\cdot 0.5}\right)^2} = 71\ lbf$$ actual shear ea. fast.

$$T_{F2} := \frac{R_{DL}\cdot(d_1)}{(4.875\,in)\cdot(2)\cdot 0.85} + \frac{R_{WL}\cdot(2.5\,in)}{n_{F2}\cdot(1.5\,in)\cdot 0.85} = 272\ lbf$$ actual tension ea. fast.

$$R_{WL2a} := \left[\left[1.0 - \frac{\sqrt{\left(\frac{R_{DL}}{n_{F2}}\right)^2 + \left(\frac{R_{DL}\cdot 1.0\,in}{5.5\,in\cdot n_{F2}\cdot 0.333}\right)^2}}{V_{alF2}}\right]\cdot T_{alF2} - \frac{R_{DL}\cdot(d_1)}{(4.875\,in)\cdot(n_{F2}\cdot 0.667)\cdot 0.85}\right]\cdot\frac{n_{F2}\cdot 1.5\,in\cdot 0.85}{2.5\,in} = 15\ lbf$$

ASSUME: Hollow CMU

$$\left(\frac{V_{F2}}{V_{alF2}} + \frac{T_{F2}}{T_{alF2}}\right) = \text{"2.08 > 1.05 NOT OK"}$$

$$\left(\frac{T_{F2}}{T_{alF2}}\right) = \text{"1.7 > 1.05 NOT OK"}$$

$$\left(\frac{V_{F2}}{V_{alF2}}\right) = \text{"0.38 < 1.00 OK"}$$

Anchor option not suitable for 4" double bracket for this given lateral reaction with the 200 lbf vertical reaction

Use (3) 3/16" Diameter DeWALT Ultracon+ Per Clip,
1-1/4" Min. Embedment
2-1/2" Min. Edge Distance
2-1/4" Min. Spacing
1/4" Maximum Shim Thickness

$V_{alF3} := 373\,lbf$ allow shear ea. fast

$T_{alF3} := 225\,lbf$ allow tension ea. fast.

(F3) Check Screws into Steel Studs

$n_{F3} := 4$ *number of fasteners*

$$V_{F3} := \sqrt{\left(\frac{R_{DL}}{n_{F3}}\right)^2 + \left(\frac{R_{DL}\cdot 1.0\,in}{3.25\,in\cdot n_{F3}\cdot 0.5}\right)^2} = 59\,lbf$$ *actual shear ea. fast.*

$$T_{F3} := \frac{R_{DL}\cdot(d_1)}{(4.875\,in)\cdot(0.5\cdot n_{F3})\cdot 0.85} + \frac{R_{WL}\cdot(2.5\,in)}{n_{F3}\cdot(1.5\,in)\cdot 0.85} = 225\,lbf$$ *actual tension ea. fast.*

$$R_{WL3a} := \left[\left[\frac{1.15}{2.55} - \frac{\sqrt{\left(\frac{R_{DL}}{n_{F3}}\right)^2 + \left(\frac{R_{DL}\cdot 1.0\,in}{3.25\,in\cdot n_{F3}\cdot 0.5}\right)^2}}{3V_{alF3}}\right]\cdot 3T_{alF3} - \frac{R_{DL}\cdot(d_1)}{(4.87\,in)\cdot(n_{F3}\cdot 0.5)\cdot 0.85}\right]\cdot\frac{n_{F3}\cdot 1.5\,in\cdot 0.85}{2.5\,in} = 376\,lbf$$

$$R_{WL3b} := \left[\left[T_{alF3} - \frac{R_{DL}\cdot d_1}{4.875\,in\cdot 0.85\cdot(n_{F3}\cdot 0.5)}\right]\cdot\frac{n_{F3}\cdot 1.5\,in\cdot 0.85}{2.5\,in}\right] = 287\,lbf$$

$$R_{WL3} := \min(R_{WL3a}, R_{WL3b}) = 287\,lbf$$

ASSUME: 16 gauge steel studs, Fy = 50 ksi

$$\left[\frac{\frac{V_{F3}}{3\cdot V_{alF3}} + \frac{T_{F3}}{3\cdot T_{alF3}}}{\left(\frac{1.15}{2.55}\right)}\right] = \text{"0.86 < 1.00 OK"}$$

$$\left(\frac{T_{F3}}{T_{alF3}}\right) = \text{"1 < 1.05 OK"}$$

$$\left(\frac{V_{F3}}{V_{alF3}}\right) = \text{"0.16 < 1.00 OK"}$$

USE (4) #12 EJOT JT3-DP3 Screws Per Clip
Grade 5 or Better, Fy = 92 ksi
2-3/4" O.C as Shown
1/4" Max Shim Thickness

$V_{alF4} := 620\,lbf$ allow shear ea. fast

$T_{alF4} := 460\,lbf$ allow tension ea. fast.

(F4) Check Screws into Grout-Filled CMU

$n_{F4} := 2$ number of fasteners

$$V_{F4} := \sqrt{R_{DL}^{2} + \left(\frac{R_{DL}\cdot 1.0\,in}{2.25\,in}\right)^{2}}\cdot\frac{1}{n_{F4}} = 109\,lbf$$ actual shear ea. fast.

$$T_{F4} := \frac{R_{DL}\cdot(d_1)}{(4.87\,in)\cdot(1)\cdot 0.85} + \frac{R_{WL}\cdot(2.5\,in)}{n_{F4}\cdot(1.5\,in)\cdot 0.85} = 450\,lbf$$ actual tension ea. fast.

$$R_{WL4} := \left[\left[1.0 - \frac{\sqrt{\left(\frac{R_{DL}}{n_{F4}}\right)^{2} + \left(\frac{R_{DL}\cdot 1.0\,in}{3.25\,in\cdot n_{F4}\cdot 0.5}\right)^{2}}}{V_{alF4}}\right]\cdot T_{alF4} - \frac{R_{DL}\cdot(d_1)}{(4.87\,in)\cdot(n_{F4}\cdot 0.5)\cdot 0.85}\right]\cdot\frac{n_{F4}\cdot 1.5\,in\cdot 0.85}{2.5\,in} = 208\,lbf$$

ASSUME: Grout-Filled CMU, f'm=1,500 psi minimum

$$'\left(\frac{V_{F4}}{V_{alF4}} + \frac{T_{F4}}{T_{alF4}}\right) = \text{"1.16 > 1.05 NOT OK"}$$

$$'\left(\frac{T_{F4}}{T_{alF4}}\right) = \text{"0.98 < 1.00 OK"}$$

$$'\left(\frac{V_{F4}}{V_{alF4}}\right) = \text{"0.18 < 1.00 OK"}$$

Anchor option not suitable for 4" double bracket for this given lateral reaction with the 200 lbf vertical reaction

Use (2) 3/8" Diameter DeWALT Wedge Bolt+ Per Clip,
into f'm=1,500 psi Grout -Filed CMU
3" Min. Embedment
3-3/4" Min. Edge Distance
3-1/4" Min. Spacing
3/8" Maximum Shim Thickness

Dead Load Anchor Bracket Design (5in Bracket)	Detail Ref.	Sheet No: A4

Wind Load:

$R_{WL} := 236\,lbf$

Dead Load:

$d_1 := 4.5\,in$ Moment Arm for Bracket Deadload, From 5in Bracket

$R_{DL} := 150\,lbf$

(LB2) Check Local Bending (Weak)

$t_{LB2} := 0.15\,in$ thickness

$l_{LB2} := 6.5\,in$ width

$x_2 := 1.0\,in$ prying arm

$F_{y2} := 35000\,psi$ yield strength

$$R_{WL2} := \frac{\frac{t_{LB2}^2 \cdot l_{LB2}}{6} \cdot \frac{1.5 \cdot F_{y2}}{1.65}}{x_2} - \frac{R_{DL} \cdot (d_1)}{l_{LB2} \cdot (0.67)} = 620.57\,lbf$$

$$M_{LB2} := R_{WL} \cdot x_2 + \frac{R_{DL} \cdot (d_1)}{l_{LB2} \cdot (0.67)} \cdot x_2 = 391\,in \cdot lbf$$

$$F_{bLB2} := \frac{1.5 \cdot F_{y2}}{1.65} = 31818\,psi \quad \text{6061-T6 Alum}$$

$$f_{bLB2} := \frac{M_{LB2} \cdot 6}{t_{LB2}^2 \cdot l_{LB2}} = 16041 \cdot psi$$

$$\left(\frac{f_{bLB2}}{F_{bLB2}}\right) = \text{"0.5 < 1.00 OK"}$$

Use Extruded 4" Bracket Clip Back Flange Min. 0.150" Thick, 6-1/2" Long, (6061-T6 Alum)

(LB3) Check Local Bending (Strong)

$t_{LB3} := 0.15\,in$ thickness

$l_{LB3} := 6.5\,in$ width

$F_{y3} := 35000\,psi$ yield strength

$M_{LB3} := R_{DL} \cdot d_1 = 675\,in \cdot lbf$

$$F_{bLB3} := \frac{1.5 \cdot F_{y3}}{1.65} = 31818\,psi \quad \text{6061-T6 Alum}$$

$$f_{bLB3} := \frac{M_{LB3} \cdot 6}{t_{LB3} \cdot l_{LB3}^2} = 639 \cdot psi$$

$$\left(\frac{f_{bLB3}}{F_{bLB3}}\right) = \text{"0.02 < 1.00 OK"}$$

Use Extruded 4" Bracket Clip Back Flange Min. 0.150" Thick, 6-1/2" Long, (6061-T6 Alum)

(F1) Check Bracket Fasteners

$n_{F1} := 4$ number of fasteners

$V_{alF1} := \min[275, 0.19\cdot(0.1)\cdot(30000)]\,lbf = 275\cdot lbf$ allowabl shear

$R_{WL1} := \sqrt{(V_{alF1}\cdot n_{F1})^2 + R_{DL}^2} = 1110\,lbf$

Use (4) S.S #10 (0.19" Dia.) Per Clip
300 Series, Cond. CW, Fy = 65 ksi

$V_{alF2} := 185\,lbf$ allow shear ea. fast

$T_{alF2} := 160\,lbf$ allow tension ea. fast.

(F2) Check Screws into Hollow Block CMU

$n_{F2} := 3$ number of fasteners

$$V_{F2} := \sqrt{\left(\frac{R_{DL}}{n_{F2}}\right)^2 + \left(\frac{R_{DL}\cdot 1.0in}{5.5in\cdot n_{F2}\cdot 0.5}\right)^2} = 53\,lbf$$ actual shear ea. fast.

$$T_{F2} := \frac{R_{DL}\cdot(d_1)}{(4.875in)\cdot(2)\cdot 0.85} + \frac{R_{WL}\cdot(2.5in)}{n_{F2}\cdot(1.5in)\cdot 0.85} = 236\,lbf$$ actual tension ea. fast.

$$R_{WL2a} := \left[\left[1.0 - \frac{\sqrt{\left(\frac{R_{DL}}{n_{F2}}\right)^2 + \left(\frac{R_{DL}\cdot 1.0in}{5.5in\cdot n_{F2}\cdot 0.333}\right)^2}}{V_{alF2}}\right]\cdot T_{alF2} - \frac{R_{DL}\cdot(d_1)}{(4.875in)\cdot(n_{F2}\cdot 0.667)\cdot 0.85}\right]\cdot\frac{n_{F2}\cdot 1.5in\cdot 0.85}{2.5in} = 45\,lbf$$

ASSUME: Hollow CMU

$$\left(\frac{V_{F2}}{V_{alF2}} + \frac{T_{F2}}{T_{alF2}}\right) = \text{"1.76 > 1.05 NOT OK"}$$

$$\left(\frac{T_{F2}}{T_{alF2}}\right) = \text{"1.47 > 1.05 NOT OK"}$$

$$\left(\frac{V_{F2}}{V_{alF2}}\right) = \text{"0.29 < 1.00 OK"}$$

Anchor option not suitable for 5" double bracket for this given lateral reaction with the 150 lbf vertical reaction

Use (3) 3/16" Diameter DeWALT Ultracon+ Per Clip,
1-1/4" Min. Embedment
2-1/2" Min. Edge Distance
2-1/4" Min. Spacing
1/4" Maximum Shim Thickness

$V_{alF3} := 373\,lbf$ allow shear ea. fast

$T_{alF3} := 225\,lbf$ allow tension ea. fast.

(F3) Check Screws into Steel Studs

$n_{F3} := 4$ *number of fasteners*

$$V_{F3} := \sqrt{\left(\frac{R_{DL}}{n_{F3}}\right)^2 + \left(\frac{R_{DL}\cdot 1.0in}{3.25in\cdot n_{F3}\cdot 0.5}\right)^2} = 44\,lbf$$ *actual shear ea. fast.*

$$T_{F3} := \frac{R_{DL}\cdot(d_1)}{(4.875in)\cdot(0.5\cdot n_{F3})\cdot 0.85} + \frac{R_{WL}\cdot(2.5in)}{n_{F3}\cdot(1.5in)\cdot 0.85} = 197\,lbf$$ *actual tension ea. fast.*

$$R_{WL3a} := \left[\left[\frac{1.15}{2.55} - \frac{\sqrt{\left(\frac{R_{DL}}{n_{F3}}\right)^2 + \left(\frac{R_{DL}\cdot 1.0in}{3.25in\cdot n_{F3}\cdot 0.5}\right)^2}}{3V_{alF3}}\right]\cdot 3T_{alF3} - \frac{R_{DL}\cdot(d_1)}{(4.87in)\cdot(n_{F3}\cdot 0.5)\cdot 0.85}\right]\cdot\frac{n_{F3}\cdot 1.5in\cdot 0.85}{2.5in} = 400\,lbf$$

$$R_{WL3b} := \left[\left[T_{alF3} - \frac{R_{DL}\cdot d_1}{4.875in\cdot 0.85\cdot(n_{F3}\cdot 0.5)}\right]\cdot\frac{n_{F3}\cdot 1.5in\cdot 0.85}{2.5in}\right] = 293\,lbf$$

$$R_{WL3} := \min(R_{WL3a}, R_{WL3b}) = 293\,lbf$$

ASSUME: 16 gauge steel studs, Fy = 50 ksi

$$\left[\frac{\frac{V_{F3}}{3\cdot V_{alF3}} + \frac{T_{F3}}{3\cdot T_{alF3}}}{\left(\frac{1.15}{2.55}\right)}\right] = \text{"0.73 < 1.00 OK"}$$

$$\left(\frac{T_{F3}}{T_{alF3}}\right) = \text{"0.88 < 1.00 OK"}$$

$$\left(\frac{V_{F3}}{V_{alF3}}\right) = \text{"0.12 < 1.00 OK"}$$

USE (4) #12 EJOT JT3-DP3 Screws Per Clip
Grade 5 or Better, Fy = 92 ksi
2-3/4" O.C as Shown
1/4" Max Shim Thickness

$V_{alF4} := 620\,lbf$ allow shear ea. fast

$T_{alF4} := 460\,lbf$ allow tension ea. fast.

(F4) Check Screws into Grout-Filled CMU

$n_{F4} := 2$ number of fasteners

$$V_{F4} := \sqrt{R_{DL}^2 + \left(\frac{R_{DL}\cdot 1.0\,in}{2.25\,in}\right)^2}\cdot\frac{1}{n_{F4}} = 82\,lbf$$ actual shear ea. fast.

$$T_{F4} := \frac{R_{DL}\cdot(d_1)}{(4.87\,in)\cdot(1)\cdot 0.85} + \frac{R_{WL}\cdot(2.5\,in)}{n_{F4}\cdot(1.5\,in)\cdot 0.85} = 394\,lbf$$ actual tension ea. fast.

$$R_{WL4} := \left[\left[1.0 - \frac{\sqrt{\left(\frac{R_{DL}}{n_{F4}}\right)^2 + \left(\frac{R_{DL}\cdot 1.0\,in}{3.25\,in\cdot n_{F4}\cdot 0.5}\right)^2}}{V_{alF4}}\right]\cdot T_{alF4} - \frac{R_{DL}\cdot(d_1)}{(4.87\,in)\cdot(n_{F4}\cdot 0.5)\cdot 0.85}\right]\cdot\frac{n_{F4}\cdot 1.5\,in\cdot 0.85}{2.5\,in} = 236\,lbf$$

ASSUME: Grout-Filled CMU, f'm=1,500 psi minimum

$$'\left(\frac{V_{F4}}{V_{alF4}} + \frac{T_{F4}}{T_{alF4}}\right) = \text{"0.99 < 1.00 OK"}$$

$$'\left(\frac{T_{F4}}{T_{alF4}}\right) = \text{"0.86 < 1.00 OK"}$$

$$'\left(\frac{V_{F4}}{V_{alF4}}\right) = \text{"0.13 < 1.00 OK"}$$

Use (2) 3/8" Diameter DeWALT Wedge Bolt+ Per Clip,
into f'm=1,500 psi Grout -Filed CMU
3" Min. Embedment
3-3/4" Min. Edge Distance
3-1/4" Min. Spacing
3/8" Maximum Shim Thickness

EJOT SAPHIR® Self-Drilling

JT4-ZT-4 4.8 x L Range

Material Specification

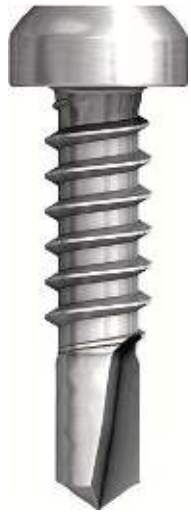

Fastener.

High quality Stainless steel grade 304 St/St, ISO group A2, Din Werkstoff 1.4301.

Drive System

TORX®
T25
Recess

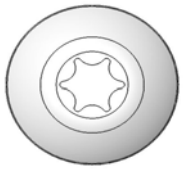

Mechanical Performance

Ultimate Fastener Shear Strength

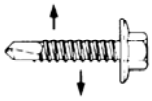

Fastener Dia	lbf
10 Gauge x L	1146

Ultimate Fastener Tensile Strength

Fastener Dia	lbf
10 Gauge x L	1809

Ultimate Pullout Load lbf

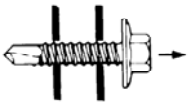

Fastener Dia	Nominal Aluminium Thickness					
	1/16	5/64	3/32	1/8	9/64	5/32
10 Gauge x L	204	265	348	429	492	575

Figures based on tests from aluminium manufactured in accordance with BS EN 145

Figures above are based on results obtained from tests carried out in our Applitec lab in accordance with equipment conforming to BS 5427 on a random sample of fasteners manufactured to EJOT tolerances. Information supplied should form part of a general guide and should performance data for a specific application be required please do not hesitate to contact us.

EJOT Fastening Systems L.P. 9900 58th Place, Suite 300 Kenosha, Wisconsin 53144
www.ejot-usa.com

EJOT The Quality Connection

20.03.15

EJOT Super-SAPHIR® Self-Drilling

JT4-6 Range

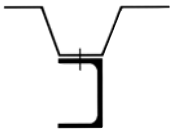

Ultimate Fastener Tensile Strength

Fastener Dia	*lbf*
12 Gauge x L	2585

Ultimate Fastener Shear Strength

Fastener Dia	*lbf*
12 Gauge x L	1686

Material Specification

Fastener.
High quality Stainless steel grade 304 St/St, ISO group A2, Din Werkstoff 1.4301.

5/16 Hex

Ultimate Pullout Load lbf

Fastener Dia	Nominal Aluminium Thickness			
	5/64	1/8	5/32	15/64
12 Gauge x L	528	1034	1697	1843

Contact EJOT technical department performance from specific aluminium grades

Ultimate Pullover Load lbf

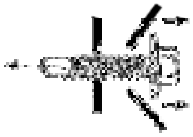

Washer Face	Nominal Sheet Thickness	
	Aluminium (Gauge)	
	23	21
S5/8 Washer	449	494

Figures based on performed in accordance with BS 5427

Figures above are based on results obtained from tests carried out in our Applitec lab in accordance with equipment conforming to BS 5427 on a random sample of fasteners manufactured to EJOT tolerances. Information supplied should form part of a general guide and should performance data for a specific application be required please do not hesitate to contact us.

EJOT Fastening Systems L.P. 9900 58th Place, Suite 300 Kenosha, Wisconsin 53144
www.ejot-usa.com

EJOT The Quality Connection

20.03.15

MASONRY PERFORMANCE DATA

Ultimate and Allowable Load Capacities for UltraCon+ Anchors Installed in the Face of Hollow Concrete Masonry[1,2,3]

Nominal Anchor Diameter d in.	Minimum Embed. Depth h_{nom} In. (mm)	Minimum Edge Distance In. (mm)	Minimum End Distance In. (mm)	Minimum Spacing In. (mm)	ASTM C90 Block Type	Ultimate Load		Allowable Load	
						Tension lbs. (kN)	Shear lbs. (kN)	Tension lbs. (kN)	Shear lbs. (kN)
3/16	1-1/4 (31.8)	1 (25.4)	2 (50.8)	1-1/2 (38.1)	Normal Weight	740 (3.3)	405 (1.8)	150 (0.7)	80 (0.4)
	1-1/4 (31.8)			3 (76.2)	Normal Weight	815 (3.6)	585 (2.6)	165 (0.7)	115 (0.5)
	1-1/4 (31.8)			6 (152.4)	Normal Weight	815 (3.6)	585 (2.6)	165 (0.7)	115 (0.5)
	1 (25.4)	2 (50.8)	2 (50.8)	1-1/2 (38.1)	Lightweight	300 (1.3)	460 (2.1)	55 (0.3)	90 (0.4)
	1 (25.4)			3 (76.2)	Lightweight	340 (1.5)	460 (2.1)	65 (0.3)	90 (0.4)
	1-1/4 (31.8)			1-1/2 (38.1)	Normal Weight	740 (3.3)	700 (3.1)	150 (0.7)	140 (0.6)
	1-1/4 (31.8)	2-1/2 (63.5)	2-1/2 (63.5)	1-1/8 (28.6)	Normal Weight	790 (3.5)	935 (4.1)	160 (0.7)	185 (0.8)
	1-1/4 (31.8)			2-1/4 (57.2)	Normal Weight	790 (3.5)	935 (4.1)	160 (0.7)	185 (0.8)
	1-1/4 (31.8)			6 (152.4)	Normal Weight	790 (3.5)	935 (4.1)	160 (0.7)	185 (0.8)
	1 (25.4)	3 (76.2)	3 (76.2)	1-1/2 (38.1)	Lightweight	385 (1.8)	670 (3.0)	80 (0.4)	135 (0.6)
	1 (25.4)			3 (76.2)	Lightweight	440 (2.0)	670 (3.0)	90 (0.4)	135 (0.6)
1/4	1-1/4 (31.8)	1 (25.4)	2 (50.8)	1-1/2 (38.1)	Normal Weight	725 (3.2)	475 (2.1)	145 (0.6)	95 (0.4)
	1-1/4 (31.8)			3 (76.2)	Normal Weight	940 (4.1)	800 (3.5)	190 (0.8)	160 (0.7)
	1-1/4 (31.8)			6 (152.4)	Normal Weight	725 (3.2)	690 (3.0)	145 (0.6)	140 (0.6)
	1 (25.4)	2 (50.8)	2 (50.8)	2 (50.8)	Lightweight	435 (1.9)	530 (2.4)	90 (0.4)	90 (0.4)
	1 (25.4)			4 (101.6)	Lightweight	495 (2.2)	530 (2.4)	100 (0.4)	90 (0.4)
	1-1/4 (31.8)			2 (50.8)	Normal Weight	760 (3.4)	740 (3.3)	150 (0.6)	150 (0.7)
	1-1/4 (31.8)			4 (101.6)	Normal Weight	950 (4.2)	740 (3.3)	190 (0.8)	150 (0.7)
	1-1/4 (31.8)	2-1/2 (63.5)	2-1/2 (63.5)	1-1/2 (38.1)	Normal Weight	800 (3.5)	1,220 (5.4)	160 (0.7)	245 (1.1)
	1-1/4 (31.8)			3 (76.2)	Normal Weight	880 (3.9)	1,450 (6.4)	175 (0.8)	290 (1.3)
	1-1/4 (31.8)			6 (152.4)	Normal Weight	880 (3.9)	1,450 (6.4)	175 (0.8)	290 (1.3)
	1 (25.4)	3 (76.2)	3 (76.2)	2 (50.8)	Lightweight	510 (2.3)	820 (3.6)	100 (0.4)	165 (0.7)
	1 (25.4)			4 (101.6)	Lightweight	580 (2.6)	820 (3.6)	115 (0.5)	165 (0.7)

1. Tabulated load values are for anchors installed in minimum 8 wide, Type II, light weight or normal weight concrete masonry units conforming to ASTM C90 that have reached the minimum designated ultimate compressive strength at the time of installation (f'm ≥ 2,000 psi). Mortar must be a minimum Grade N.
2. Allowable load capacities listed are calculated using an applied safety factor of 5.0. Consideration of safety factors of 10 or higher may be necessary depending on the application, such as life safety or overhead.
3. Allowable shear loads into the face shell of a masonry wall may be applied in any direction.

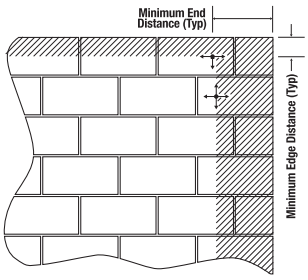

F3

MASONRY PERFORMANCE DATA

Ultimate Load Capacities for 316 Stainless Steel Wedge-Bolt installed into the Face or End of Grout Filled Concrete Masonry[1,2,3]

Nominal Anchor Diameter d in.	Minimum Embed. h_{nom} in. (mm)	Minimum Edge Distance in. (mm)	Minimum End Distance in. (mm)	Tension lbs. (kN)		Shear lbs. (kN)		
				f'm = 1,500 psi	f'm = 2,000 psi	Loading Direction	f'm = 1,500 psi	f'm = 2,000 psi
1/4	1-3/4 (44)	3-3/4 (95)	1-1/2 (38)	570 (2.5)	660 (2.9)	Perpendicular or parallel to wall edge or end	645 (2.9)	745 (3.3)
	2-1/4 (57)	3-3/4 (95)	1-1/2 (38)	1,145 (5.1)	1,325 (5.9)		910 (4.0)	1,050 (4.7)
3/8	2 (51)	3-3/4 (95)	1-1/2 (38)	1,535 (6.8)	1,775 (7.9)	Perpendicular or parallel to wall edge or end	775 (3.4)	895 (4.0)
	3 (76)	3-3/4 (95)	3-3/4 (95)	2,300 (10.2)	2,655 (11.8)	Perpendicular or parallel to wall edge or end	3,110 (13.8)	3,585 (15.9)
	3 (76)	3-3/4 (95)	11-1/4 (286)			Parallel to wall edge	3,325 (14.8)	3,835 (17.1)
1/2	2-3/4 (70)	3-3/4 (95)	1-3/4 (44)	1,330 (5.9)	1,535 (6.8)	Perpendicular or parallel to wall edge or end	2,050 (9.1)	2,365 (10.5)
	2-3/4 (70)	3-3/4 (95)	3-3/4 (95)				2,630 (11.7)	3,040 (13.5)
	4-1/2 (114)	3-3/4 (95)	11-1/4 (286)	4,680 (20.8)	5,400 (24.0)		2,630 (11.7)	3,040 (13.5)
	4-1/2 (114)	11-1/4 (286)	11-1/4 (286)				7,290 (32.4)	8,415 (37.4)

1. Tabulated load values are for anchors installed in minimum 8-inch wide, Grade N, Type II, normal-weight concrete masonry units conforming to ASTM C 90 that have reached the minimum designated ultimate strength at the time of installation (f'm ≥ 1,500 psi).
2. Ultimate load capacities must be reduced by a minimum safety factor of 5.0 or greater to determine allowable working load.
3. The tabulated load values are applicable for screw anchors installed at a critical spacing between screw anchors of 16 times the screws anchor diameter. Reduce the tabulated load capacities by 50 percent when anchors are installed at a minimum spacing between screw anchors of 8 times the screw anchor diameter. Linear interpolation may be used for intermediate spacing distances.

Allowable Load Capacities for 316 Stainless Steel Wedge-Bolt installed into the Face or End of Grout Filled Concrete Masonry[1,2,3,4,5]

Nominal Anchor Diameter d in.	Minimum Embed. h_{nom} in. (mm)	Minimum Edge Distance in. (mm)	Minimum End Distance in. (mm)	Tension lbs. (kN)		Shear lbs. (kN)		
				f'm = 1,500 psi	f'm = 2,000 psi	Loading Direction	f'm = 1,500 psi	f'm = 2,000 psi
1/4	1-3/4 (44)	3-3/4 (95)	1-1/2 (38)	115 (0.5)	130 (0.6)	Perpendicular or parallel to wall edge or end	130 (0.6)	150 (0.7)
	2-1/4 (57)	3-3/4 (95)	1-1/2 (38)	230 (1.0)	265 (1.2)		180 (0.8)	210 (0.9)
3/8	2 (51)	3-3/4 (95)	1-1/2 (38)	305 (1.4)	355 (1.6)	Perpendicular or parallel to wall edge or end	155 (0.7)	180 (0.8)
	3 (76)	3-3/4 (95)	3-3/4 (95)	460 (2.0)	530 (2.4)	Perpendicular or parallel to wall edge or end	620 (2.8)	715 (3.2)
	3 (76)	3-3/4 (95)	11-1/4 (286)			Parallel to wall edge	665 (3.0)	765 (3.4)
1/2	2-3/4 (70)	3-3/4 (95)	1-3/4 (44)	265 (1.2)	305 (1.4)	Perpendicular or parallel to wall edge or end	410 (1.8)	475 (2.1)
	2-3/4 (70)	3-3/4 (95)	3-3/4 (95)				525 (2.3)	610 (2.7)
	4-1/2 (114)	3-3/4 (95)	11-1/4 (286)	935 (4.2)	1,080 (4.8)		525 (2.3)	610 (2.7)
	4-1/2 (114)	11-1/4 (286)	11-1/4 (286)				1,460 (6.5)	1,685 (7.5)

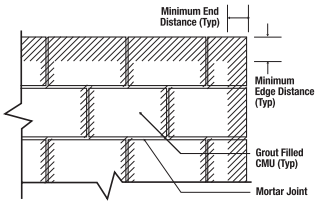

Wall Face Permissible Anchor Locations
(Un-hatched Area)

1. Tabulated load values are for anchors installed in minimum 8-inch wide, Grade N, Type II, normal-weight concrete masonry units conforming to ASTM C 90 that have reached the minimum designated ultimate strength at the time of installation (f'm ≥ 1,500 psi).
2. Allowable load capacities are calculated using an applied safety factor of 5.0. Consideration of safety factors of 10 or higher may be necessary depending on the application, such as life safety.
3. Linear interpolation for allowable loads for anchors at intermediate embedment depths may be used.
4. For installation in 3,000 psi grout filled concrete masonry (f'm = 3,000 psi) the load capacity in 1,500 psi grout filled concrete masonry (f'm = 1,500) may be increased by 40% and the load capacity in 2,000 psi grout concrete masonry (f'm = 2,000 psi) may be increased by 22%.
5. The tabulated load values are applicable for screw anchors installed at a critical spacing between screw anchors of 16 times the screws anchor diameter. Reduce the tabulated load capacities by 50 percent when anchors are installed at a minimum spacing between screw anchors of 8 times the screw anchor diameter. Linear interpolation may be used for intermediate spacing distances.

F4

TECHNICAL GUIDE – MECHANICAL ANCHORS ©2018 DEWALT – REV. C